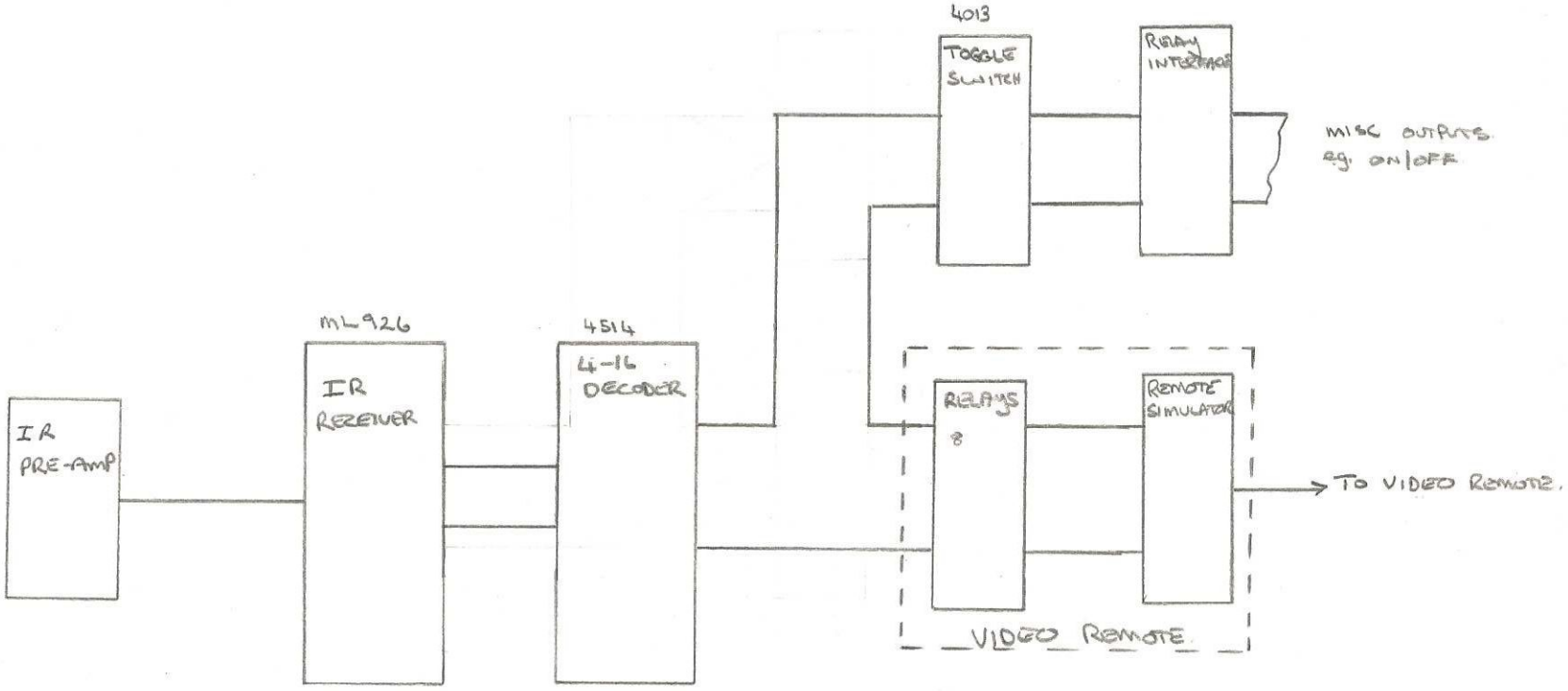
4013
TOGGLE SWITCH
RELAY INTERFACE
MISC OUTPUTS
e.g. ON/OFF
ML926
IR RECEIVER
4514
4-16 DECODER
IR PRE-AMP
RELAYS 8
REMOTE SIMULATOR
TO VIDEO REMOTE.
VIDEO REMOTE